StormTech® SC-740 Chamber

Designed to meet the most stringent industry performance standards for superior structural integrity while providing designers with a cost-effective method to save valuable land and protect water resources. The StormTech system is designed primarily to be used under parking lots, thus maximizing land usage for private (commercial) and public applications. StormTech chambers can also be used in conjunction with Green Infrastructure, thus enhancing the performance and extending the service life of these practices.

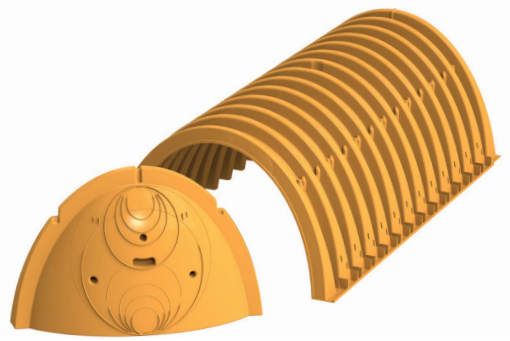

Nominal Chamber Specifications
(not to scale)

Size (L x W x H)
85.4" x 51" x 30"
2,170 mm x 1,295 mm x 762 mm

Chamber Storage
45.9 ft³ (1.30 m³)

Min. Installed Storage*
74.9 ft³ (2.12 m³)

Weight
74.0 lbs (33.6 kg)

Shipping
30 chambers/pallet
60 end caps/pallet
12 pallets/truck

*Assumes 6" (150 mm) stone above, below and between chambers and 40% stone porosity.

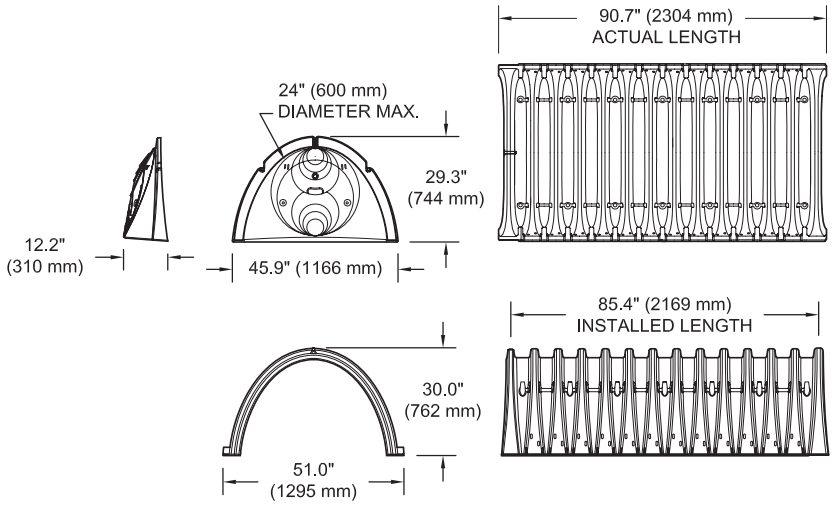

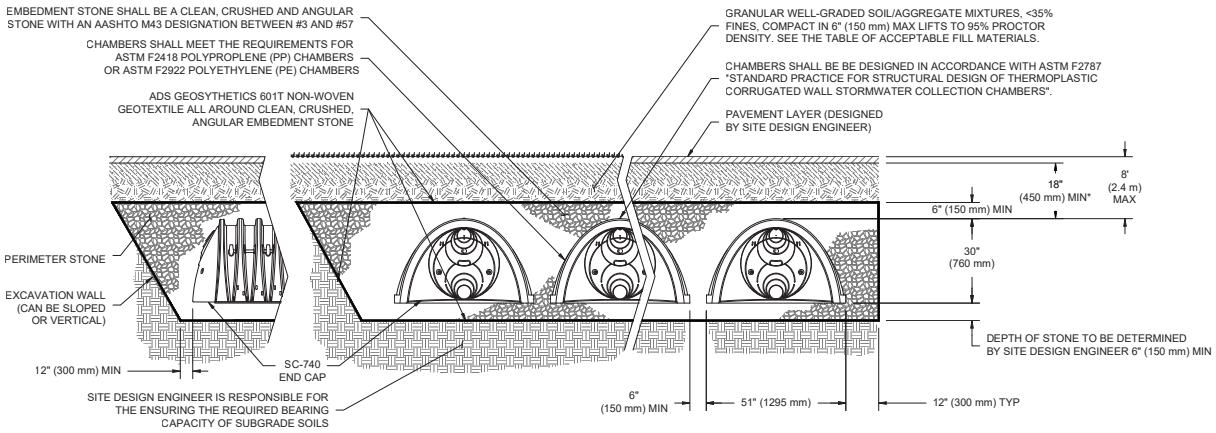

*MINIMUM COVER TO BOTTOM OF FLEXIBLE PAVEMENT. FOR UNPAVED INSTALLATIONS WHERE RUTTING FROM VEHICLES MAY OCCUR, INCREASE COVER TO 24" (600 mm).

ADS StormTech™

StormTech SC-740 Specifications

Cumulative Storage Volumes Per Chamber

Assumes 40% Stone Porosity. Calculations are Based Upon a 6” (150 mm) Stone Base Under Chambers.

Depth of Water in System Inches (mm)	Cumulative Chamber Storage ft³ (m³)	Total System Cumulative Storage ft³ (m³)
42 (1067)	45.90 (1.300)	74.90 (2.121)
41 (1041)	45.90 (1.300)	73.77 (2.089)
40 (1016)	45.90 (1.300)	72.64 (2.057)
39 (991)	45.90 (1.300)	71.52 (2.025)
38 (965)	45.90 (1.300)	70.39 (1.993)
37 (940)	45.90 (1.300)	69.26 (1.961)
36 (914)	45.90 (1.300)	68.14 (1.929)
35 (889)	45.85 (1.298)	66.98 (1.897)
34 (864)	45.69 (1.294)	65.75 (1.862)
33 (838)	45.41 (1.286)	64.46 (1.825)
32 (813)	44.81 (1.269)	62.97 (1.783)
31 (787)	44.01 (1.246)	61.36 (1.737)
30 (762)	43.06 (1.219)	59.66 (1.689)
29 (737)	41.98 (1.189)	57.89 (1.639)
28 (711)	40.80 (1.155)	56.05 (1.587)
27 (686)	39.54 (1.120)	54.17 (1.534)
26 (660)	38.18 (1.081)	52.23 (1.479)
25 (635)	36.74 (1.040)	50.23 (1.422)
24 (610)	35.22 (0.977)	48.19 (1.365)
23 (584)	33.64 (0.953)	46.11 (1.306)
22 (559)	31.99 (0.906)	44.00 (1.246)
21 (533)	30.29 (0.858)	1.85 (1.185)
20 (508)	28.54 (0.808)	39.67 (1.123)
19 (483)	26.74 (0.757)	37.47 (1.061)
18 (457)	24.89 (0.705)	35.23 (0.997)
17 (432)	23.00 (0.651)	32.96 (0.939)
16 (406)	21.06 (0.596)	30.68 (0.869)
15 (381)	19.09 (0.541)	28.36 (0.803)
14 (356)	17.08 (0.484)	26.03 (0.737)
13 (330)	15.04 (0.426)	23.68 (0.670)
12 (305)	12.97 (0.367)	21.31 (0.608)
11 (279)	10.87 (0.309)	18.92 (0.535)
10 (254)	8.74 (0.247)	16.51 (0.468)
9 (229)	6.58 (0.186)	14.09 (0.399)
8 (203)	4.41 (0.125)	11.66 (0.330)
7 (178)	2.21 (0.063)	9.21 (0.264)
6 (152)	0 (0)	6.76 (0.191)
5 (127)	0 (0)	5.63 (0.160)
4 (102)	0 (0)	4.51 (0.128)
3 (76)	0 (0)	3.38 (0.096)
2 (51)	0 (0)	2.25 (0.064)
1 (25)	0 (0)	1.13 (0.032)

Stone Cover

Stone Foundation

Note: Add 1.13 ft³ (0.032 m³) of storage for each additional inch (25 mm) of stone foundation.

Storage Volume Per Chamber ft³ (m³)

	Bare Chamber Storage ft³ (m³)	Chamber and Stone Foundation Depth in. (mm)		
		6 (150)	12 (300)	18 (450)
SC-740 Chamber	45.9 (1.3)	74.9 (2.1)	81.7 (2.3)	88.4 (2.5)

Note: Assumes 6” (150 mm) stone above chambers, 6” (150 mm) row spacing and 40% stone porosity.

Amount of Stone Per Chamber

English Tons (yds³)	Stone Foundation Depth		
	6”	12”	16”
SC-740	3.8 (2.8)	4.6 (3.3)	5.5 (3.9)
Metric Kilograms (m³)	**150 mm**	**300 mm**	**450 mm**
SC-740	3,450 (2.1)	4,170 (2.5)	4,490 (3.0)

Note: Assumes 6” (150 mm) of stone above and between chambers.

Volume Excavation Per Chamber yd³ (m³)

	Stone Foundation Depth		
	6 (150)	12 (300)	18 (450)
SC-740	5.5 (4.2)	6.2 (4.7)	6.8 (5.2)

Note: Assumes 6” (150 mm) of row separation and 18” (450 mm) of cover. The volume of excavation will vary as depth of cover increases.

ADS StormTech products, manufactured in accordance with ASTM F2418 or ASTMF2922, comply with all requirements in the Build America, Buy America (BABA) Act.

Working on a project?
Visit us at adspipe.com/stormtech and utilize the Design Tool

ADS StormTech™

ADS “Terms and Conditions of Sale” are available on the ADS website, www.ads-pipe.com
The ADS logo and the Green Stripe are registered trademarks of Advanced Drainage Systems, Inc.
StormTech® is a registered trademark of StormTech, Inc.
© 2022 Advanced Drainage Systems, Inc. 12/22 CS

adspipe.com
800-821-6710

ACCEPTABLE FILL MATERIALS: STORMTECH SC-740 CHAMBER SYSTEMS

MATERIAL LOCATION		DESCRIPTION	AASHTO MATERIAL CLASSIFICATIONS	COMPACTION / DENSITY REQUIREMENT
D	**FINAL FILL:** FILL MATERIAL FOR LAYER 'D' STARTS FROM THE TOP OF THE 'C' LAYER TO THE BOTTOM OF FLEXIBLE PAVEMENT OR UNPAVED FINISHED GRADE ABOVE. NOTE THAT PAVEMENT SUBBASE MAY BE PART OF THE 'D' LAYER.	ANY SOIL/ROCK MATERIALS, NATIVE SOILS, OR PER ENGINEER'S PLANS. CHECK PLANS FOR PAVEMENT SUBGRADE REQUIREMENTS.	N/A	PREPARE PER SITE DESIGN ENGINEER'S PLANS. PAVED INSTALLATIONS MAY HAVE STRINGENT MATERIAL AND PREPARATION REQUIREMENTS.
C	**INITIAL FILL:** FILL MATERIAL FOR LAYER 'C' STARTS FROM THE TOP OF THE EMBEDMENT STONE ('B' LAYER) TO 18" (450 mm) ABOVE THE TOP OF THE CHAMBER. NOTE THAT PAVEMENT SUBBASE MAY BE A PART OF THE 'C' LAYER.	GRANULAR WELL-GRADED SOIL/AGGREGATE MIXTURES, <35% FINES OR PROCESSED AGGREGATE. MOST PAVEMENT SUBBASE MATERIALS CAN BE USED IN LIEU OF THIS LAYER.	AASHTO M145[1] A-1, A-2-4, A-3 OR AASHTO M43[1] 3, 357, 4, 467, 5, 56, 57, 6, 67, 68, 7, 78, 8, 89, 9, 10	BEGIN COMPACTIONS AFTER 12" (300 mm) OF MATERIAL OVER THE CHAMBERS IS REACHED. COMPACT ADDITIONAL LAYERS IN 6" (150 mm) MAX LIFTS TO A MIN. 95% PROCTOR DENSITY FOR WELL GRADED MATERIAL AND 95% RELATIVE DENSITY FOR PROCESSED AGGREGATE MATERIALS. ROLLER GROSS VEHICLE WEIGHT NOT TO EXCEED 12,000 lbs (53 kN). DYNAMIC FORCE NOT TO EXCEED 20,000 lbs (89 kN).
B	**EMBEDMENT STONE:** FILL SURROUNDING THE CHAMBERS FROM THE FOUNDATION STONE ('A' LAYER) TO THE 'C' LAYER ABOVE.	CLEAN, CRUSHED, ANGULAR STONE	AASHTO M43[1] 3, 357, 4, 467, 5, 56, 57	NO COMPACTION REQUIRED.
A	**FOUNDATION STONE:** FILL BELOW CHAMBERS FROM THE SUBGRADE UP TO THE FOOT (BOTTOM) OF THE CHAMBER.	CLEAN, CRUSHED, ANGULAR STONE	AASHTO M43[1] 3, 357, 4, 467, 5, 56, 57	PLATE COMPACT OR ROLL TO ACHIEVE A FLAT SURFACE.[2,3]

PLEASE NOTE:
1. THE LISTED AASHTO DESIGNATIONS ARE FOR GRADATIONS ONLY. THE STONE MUST ALSO BE CLEAN, CRUSHED, ANGULAR. FOR EXAMPLE, A SPECIFICATION FOR #4 STONE WOULD STATE: "CLEAN, CRUSHED, ANGULAR NO. 4 (AASHTO M43) STONE".
2. STORMTECH COMPACTION REQUIREMENTS ARE MET FOR 'A' LOCATION MATERIALS WHEN PLACED AND COMPACTED IN 6" (150 mm) (MAX) LIFTS USING TWO FULL COVERAGES WITH A VIBRATORY COMPACTOR.
3. WHERE INFILTRATION SURFACES MAY BE COMPROMISED BY COMPACTION, FOR STANDARD DESIGN LOAD CONDITIONS, A FLAT SURFACE MAY BE ACHIEVED BY RAKING OR DRAGGING WITHOUT COMPACTION EQUIPMENT. FOR SPECIAL LOAD DESIGNS, CONTACT STORMTECH FOR COMPACTION REQUIREMENTS.
4. ONCE LAYER 'C' IS PLACED, ANY SOIL/MATERIAL CAN BE PLACED IN LAYER 'D' UP TO THE FINISHED GRADE. MOST PAVEMENT SUBBASE SOILS CAN BE USED TO REPLACE THE MATERIAL REQUIREMENTS OF LAYER 'C' OR 'D' AT THE SITE DESIGN ENGINEER'S DISCRETION.

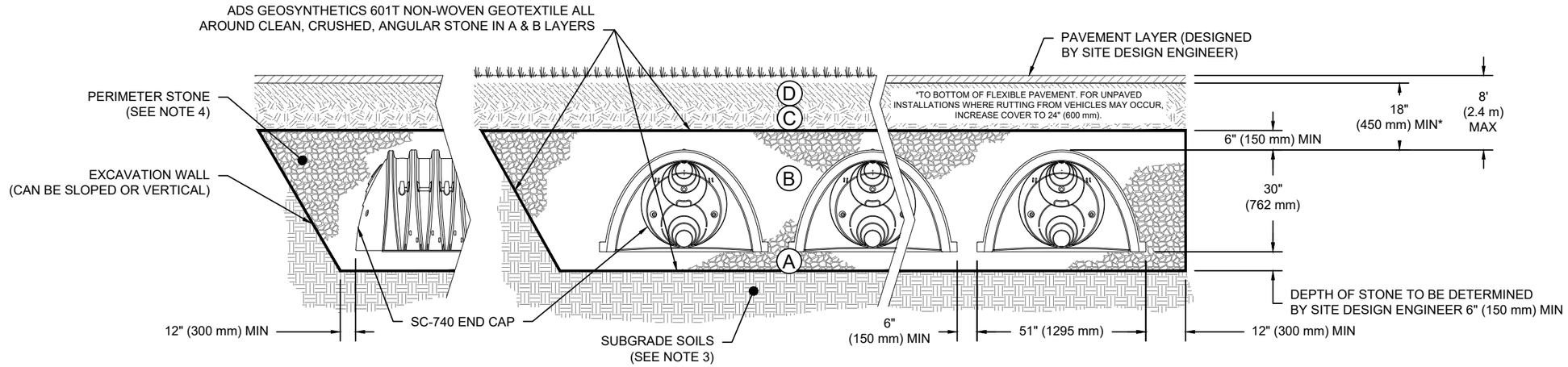

NOTES:

1. CHAMBERS SHALL MEET THE REQUIREMENTS OF ASTM F2418, "STANDARD SPECIFICATION FOR POLYPROPYLENE (PP) CORRUGATED WALL STORMWATER COLLECTION CHAMBERS".
2. SC-740 CHAMBERS SHALL BE DESIGNED IN ACCORDANCE WITH ASTM F2787 "STANDARD PRACTICE FOR STRUCTURAL DESIGN OF THERMOPLASTIC CORRUGATED WALL STORMWATER COLLECTION CHAMBERS".
3. THE SITE DESIGN ENGINEER IS RESPONSIBLE FOR ASSESSING THE BEARING RESISTANCE (ALLOWABLE BEARING CAPACITY) OF THE SUBGRADE SOILS AND THE DEPTH OF FOUNDATION STONE WITH CONSIDERATION FOR THE RANGE OF EXPECTED SOIL MOISTURE CONDITIONS.
4. PERIMETER STONE MUST BE EXTENDED HORIZONTALLY TO THE EXCAVATION WALL FOR BOTH VERTICAL AND SLOPED EXCAVATION WALLS.
5. REQUIREMENTS FOR HANDLING AND INSTALLATION:
   - TO MAINTAIN THE WIDTH OF CHAMBERS DURING SHIPPING AND HANDLING, CHAMBERS SHALL HAVE INTEGRAL, INTERLOCKING STACKING LUGS.
   - TO ENSURE A SECURE JOINT DURING INSTALLATION AND BACKFILL, THE HEIGHT OF THE CHAMBER JOINT SHALL NOT BE LESS THAN 2".
   - TO ENSURE THE INTEGRITY OF THE ARCH SHAPE DURING INSTALLATION, a) THE ARCH STIFFNESS CONSTANT AS DEFINED IN SECTION 6.2.8 OF ASTM F2418 SHALL BE GREATER THAN OR EQUAL TO 550 LBS/FT/%. AND b) TO RESIST CHAMBER DEFORMATION DURING INSTALLATION AT ELEVATED TEMPERATURES (ABOVE 73° F / 23° C), CHAMBERS SHALL BE PRODUCED FROM REFLECTIVE GOLD OR YELLOW COLORS.

SC-740
STANDARD CROSS SECTION
DATE: 9/12/22
DRAWN: KLJ
PROJECT #:
CHECKED: KLJ

DATE	DRWN	CHKD	DESCRIPTION

StormTech®
Chamber System
888-892-2694 | WWW.STORMTECH.COM

4640 TRUEMAN BLVD
HILLIARD, OH 43026

THIS DRAWING HAS BEEN PREPARED BASED ON INFORMATION PROVIDED TO ADS UNDER THE DIRECTION OF THE SITE DESIGN ENGINEER OR OTHER PROJECT REPRESENTATIVE. THE SITE DESIGN ENGINEER SHALL REVIEW THIS DRAWING PRIOR TO CONSTRUCTION. IT IS THE ULTIMATE RESPONSIBILITY OF THE SITE DESIGN ENGINEER TO ENSURE THAT THE PRODUCT(S) DEPICTED AND ALL ASSOCIATED DETAILS MEET ALL APPLICABLE LAWS, REGULATIONS, AND PROJECT REQUIREMENTS.

SC-740 TECHNICAL SPECIFICATION

NTS

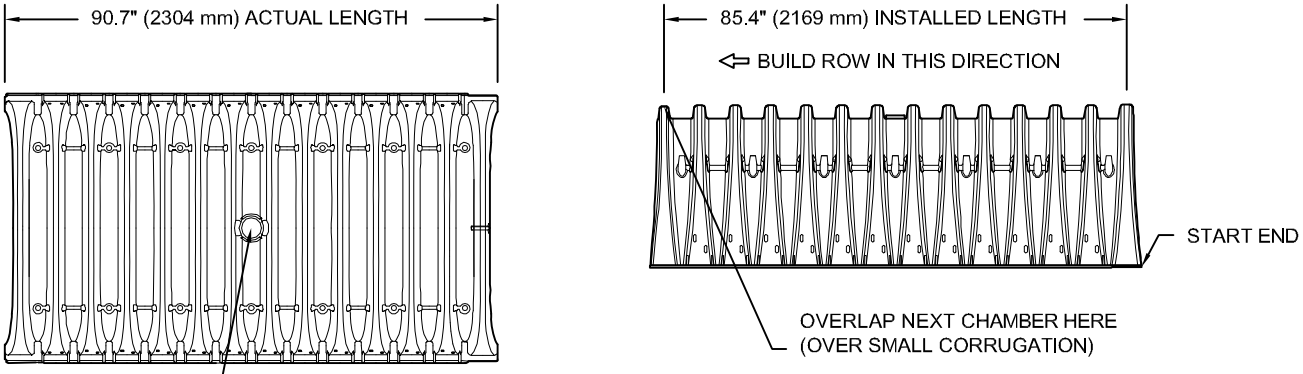

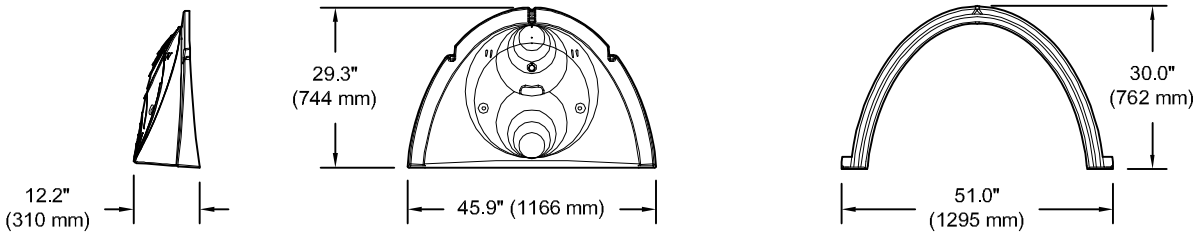

NOMINAL CHAMBER SPECIFICATIONS

SIZE (W X H X INSTALLED LENGTH)	51.0" X 30.0" X 85.4"	(1295 mm X 762 mm X 2169 mm)
CHAMBER STORAGE	45.9 CUBIC FEET	(1.30 m³)
MINIMUM INSTALLED STORAGE*	74.9 CUBIC FEET	(2.12 m³)
WEIGHT	75.0 lbs.	(33.6 kg)

*ASSUMES 6" (152 mm) STONE ABOVE, BELOW, AND BETWEEN CHAMBERS

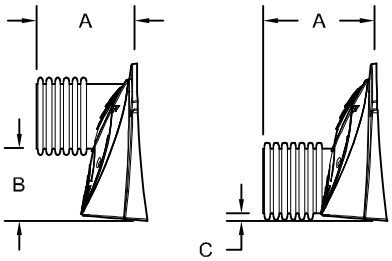

STUBS AT BOTTOM OF END CAP FOR PART NUMBERS ENDING WITH "B"
STUBS AT TOP OF END CAP FOR PART NUMBERS ENDING WITH "T"

PART #	STUB	A	B	C
SC740EPE06T / SC740EPE06TPC	6" (150 mm)	10.9" (277 mm)	18.5" (470 mm)	—
SC740EPE06B / SC740EPE06BPC			—	0.5" (13 mm)
SC740EPE08T /SC740EPE08TPC	8" (200 mm)	12.2" (310 mm)	16.5" (419 mm)	—
SC740EPE08B / SC740EPE08BPC			—	0.6" (15 mm)
SC740EPE10T / SC740EPE10TPC	10" (250 mm)	13.4" (340 mm)	14.5" (368 mm)	—
SC740EPE10B / SC740EPE10BPC			—	0.7" (18 mm)
SC740EPE12T / SC740EPE12TPC	12" (300 mm)	14.7" (373 mm)	12.5" (318 mm)	—
SC740EPE12B / SC740EPE12BPC			—	1.2" (30 mm)
SC740EPE15T / SC740EPE15TPC	15" (375 mm)	18.4" (467 mm)	9.0" (229 mm)	—
SC740EPE15B / SC740EPE15BPC			—	1.3" (33 mm)
SC740EPE18T / SC740EPE18TPC	18" (450 mm)	19.7" (500 mm)	5.0" (127 mm)	—
SC740EPE18B / SC740EPE18BPC			—	1.6" (41 mm)
SC740EPE24B*	24" (600 mm)	18.5" (470 mm)	—	0.1" (3 mm)

ALL STUBS, EXCEPT FOR THE SC740EPE24B ARE PLACED AT BOTTOM OF END CAP SUCH THAT THE OUTSIDE DIAMETER OF THE STUB IS FLUSH WITH THE BOTTOM OF THE END CAP. FOR ADDITIONAL INFORMATION CONTACT STORMTECH AT 1-888-892-2694.

* FOR THE SC740EPE24B THE 24" (600 mm) STUB LIES BELOW THE BOTTOM OF THE END CAP APPROXIMATELY 1.75" (44 mm). BACKFILL MATERIAL SHOULD BE REMOVED FROM BELOW THE N-12 STUB SO THAT THE FITTING SITS LEVEL.

NOTE: ALL DIMENSIONS ARE NOMINAL

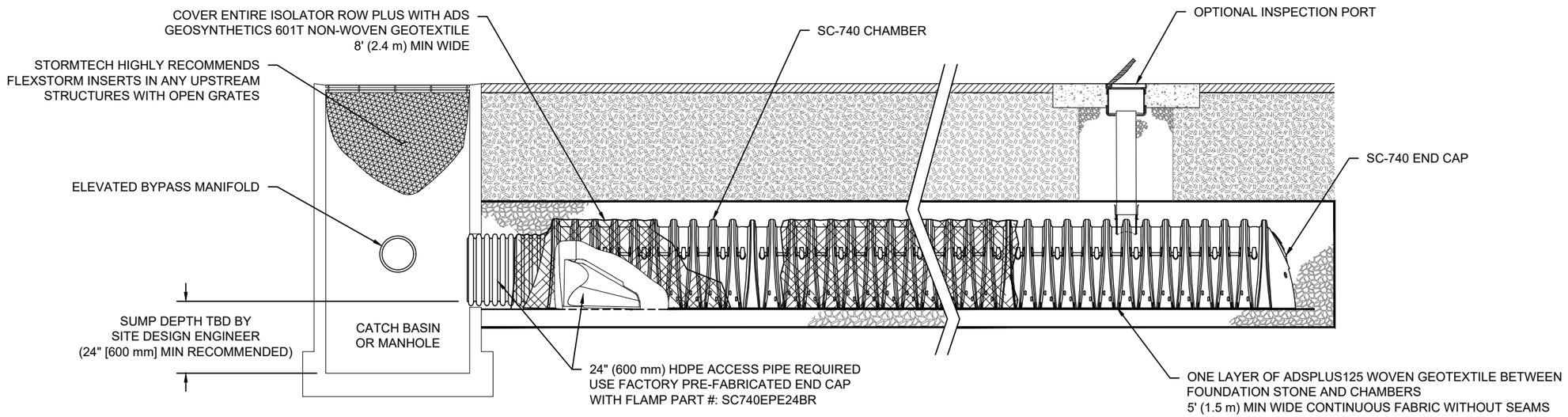

SC-740 ISOLATOR ROW PLUS DETAIL
NTS

INSPECTION & MAINTENANCE

STEP 1) INSPECT ISOLATOR ROW PLUS FOR SEDIMENT
- A. INSPECTION PORTS (IF PRESENT)
  - A.1. REMOVE/OPEN LID ON NYLOPLAST INLINE DRAIN
  - A.2. REMOVE AND CLEAN FLEXSTORM FILTER IF INSTALLED
  - A.3. USING A FLASHLIGHT AND STADIA ROD, MEASURE DEPTH OF SEDIMENT AND RECORD ON MAINTENANCE LOG
  - A.4. LOWER A CAMERA INTO ISOLATOR ROW PLUS FOR VISUAL INSPECTION OF SEDIMENT LEVELS (OPTIONAL)
  - A.5. IF SEDIMENT IS AT, OR ABOVE, 3" (80 mm) PROCEED TO STEP 2. IF NOT, PROCEED TO STEP 3.
- B. ALL ISOLATOR PLUS ROWS
  - B.1. REMOVE COVER FROM STRUCTURE AT UPSTREAM END OF ISOLATOR ROW PLUS
  - B.2. USING A FLASHLIGHT, INSPECT DOWN THE ISOLATOR ROW PLUS THROUGH OUTLET PIPE
    - i) MIRRORS ON POLES OR CAMERAS MAY BE USED TO AVOID A CONFINED SPACE ENTRY
    - ii) FOLLOW OSHA REGULATIONS FOR CONFINED SPACE ENTRY IF ENTERING MANHOLE
  - B.3. IF SEDIMENT IS AT, OR ABOVE, 3" (80 mm) PROCEED TO STEP 2. IF NOT, PROCEED TO STEP 3.

STEP 2) CLEAN OUT ISOLATOR ROW PLUS USING THE JETVAC PROCESS
- A. A FIXED CULVERT CLEANING NOZZLE WITH REAR FACING SPREAD OF 45" (1.1 m) OR MORE IS PREFERRED
- B. APPLY MULTIPLE PASSES OF JETVAC UNTIL BACKFLUSH WATER IS CLEAN
- C. VACUUM STRUCTURE SUMP AS REQUIRED

STEP 3) REPLACE ALL COVERS, GRATES, FILTERS, AND LIDS; RECORD OBSERVATIONS AND ACTIONS.

STEP 4) INSPECT AND CLEAN BASINS AND MANHOLES UPSTREAM OF THE STORMTECH SYSTEM.

NOTES

1. INSPECT EVERY 6 MONTHS DURING THE FIRST YEAR OF OPERATION. ADJUST THE INSPECTION INTERVAL BASED ON PREVIOUS OBSERVATIONS OF SEDIMENT ACCUMULATION AND HIGH WATER ELEVATIONS.

2. CONDUCT JETTING AND VACTORING ANNUALLY OR WHEN INSPECTION SHOWS THAT MAINTENANCE IS NECESSARY.

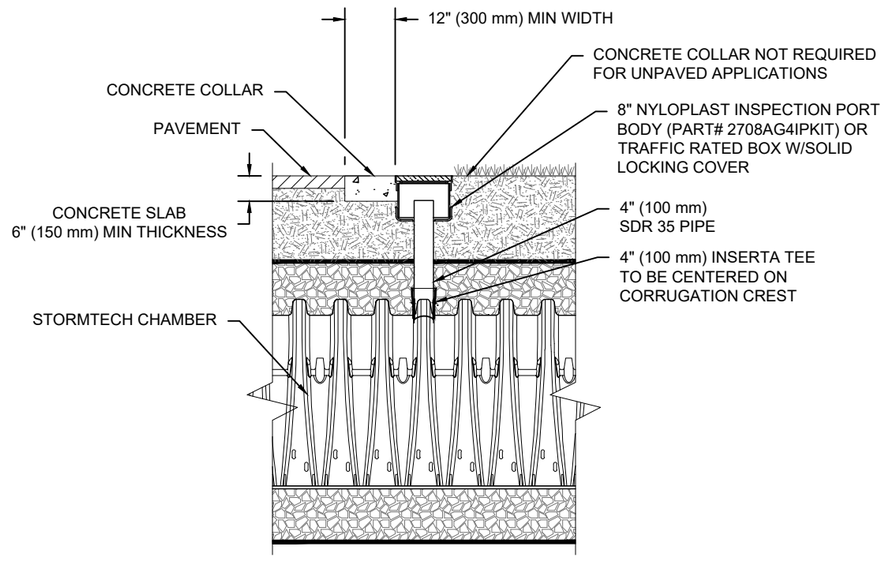

NOTE:
INSPECTION PORTS MAY BE CONNECTED THROUGH ANY CHAMBER CORRUGATION CREST.

4" PVC INSPECTION PORT DETAIL
(SC SERIES CHAMBER)
NTS

SC-740
ISOLATOR ROW PLUS DETAILS

DATE: 9/12/22 | DRAWN: KLJ | CHECKED: KLJ | PROJECT #:

DATE	DRWN	CHKD	DESCRIPTION

THIS DRAWING HAS BEEN PREPARED BASED ON INFORMATION PROVIDED TO ADS UNDER THE DIRECTION OF THE SITE DESIGN ENGINEER OR OTHER PROJECT REPRESENTATIVE. THE SITE DESIGN ENGINEER SHALL REVIEW THIS DRAWING PRIOR TO CONSTRUCTION. IT IS THE ULTIMATE RESPONSIBILITY OF THE SITE DESIGN ENGINEER TO ENSURE THAT THE PRODUCT(S) DEPICTED AND ALL ASSOCIATED DETAILS MEET ALL APPLICABLE LAWS, REGULATIONS, AND PROJECT REQUIREMENTS.

StormTech® Chamber System
888-892-2694 | WWW.STORMTECH.COM
4640 TRUEMAN BLVD
HILLIARD, OH 43026

Isolator® Row Plus
O&M Manual

ADS StormTech™

The Isolator® Row Plus

Introduction

An important component of any Stormwater Pollution Prevention Plan is inspection and maintenance. The StormTech Isolator Row Plus is a technique to inexpensively enhance Total Suspended Solids (TSS) and Total Phosphorus (TP) removal with easy access for inspection and maintenance.

The Isolator Row Plus

The Isolator Row Plus is a row of StormTech chambers, either SC-160, SC-310, SC-310-3, SC-740, DC-780, MC-3500 or MC-7200 models, that is surrounded with filter fabric and connected to a closely located manhole for easy access. The fabric-wrapped chambers provide for sediment settling and filtration as stormwater rises in the Isolator Row Plus and passes through the filter fabric. The open bottom chambers and perforated sidewalls (SC-310, SC- 310-3 and SC-740 models) allow stormwater to flow both vertically and horizontally out of the chambers. Sediments are captured in the Isolator Row Plus protecting the adjacent stone and chambers storage areas from sediment accumulation.

ADS geotextile fabric is placed between the stone and the Isolator Row Plus chambers. The woven geotextile provides a media for stormwater filtration, a durable surface for maintenance, prevents scour of the underlying stone and remains intact during high pressure jetting. A non-woven fabric is placed over the chambers to provide a filter media for flows passing through the chamber's sidewall. The non-woven fabric is not required over the SC-160, DC-780, MC-3500 or MC-7200 models as these chambers do not have perforated side walls.

The Isolator Row Plus is designed to capture the "first flush" runoff and offers the versatility to be sized on a volume basis or a flow-rate basis. An upstream manhole provides access to the Isolator Row Plus and includes a high/low concept such that stormwater flow rates or volumes that exceed the capacity of the Isolator Row Plus bypass through a manifold to the other chambers. This is achieved with an elevated bypass manifold or a high-flow weir. This creates a differential between the Isolator Row Plus row of chambers and the manifold to the rest of the system, thus allowing for settlement time in the Isolator Row Plus. After Stormwater flows through the Isolator Row Plus and into the rest of the chamber system it is either exfiltrated into the soils below or passed at a controlled rate through an outlet manifold and outlet control structure.

The Isolator Row FLAMP™ (patent pending) is a flared end ramp apparatus attached to the inlet pipe on the inside of the chamber end cap. The FLAMP provides a smooth transition from pipe invert to fabric bottom. It is configured to improve chamber function performance by enhancing outflow of solid debris that would otherwise collect at the chamber's end. It also serves to improve the fluid and solid flow into the access pipe during maintenance and cleaning and to guide cleaning and inspection equipment back into the inlet pipe when complete.

The Isolator Row Plus may be part of a treatment train system. The treatment train design and pretreatment device selection by the design engineer is often driven by regulatory requirements. Whether pretreatment is used or not, StormTech recommend using the Isolator Row Plus to minimize maintenance requirements and maintenance costs.

Note: *See the StormTech Design Manual for detailed information on designing inlets for a StormTech system, including the Isolator Row Plus.*

Looking down the Isolator Row PLUS from the manhole opening, ADS PLUS Fabric is shown between the chamber and stone base.

StormTech Isolator Row PLUS with Overflow Spillway (not to scale)

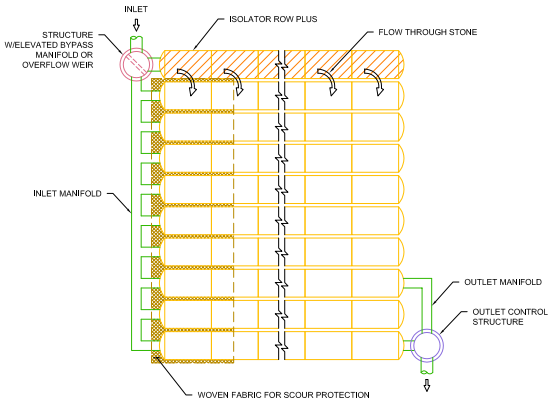

Isolator Row Plus Inspection/Maintenance

Inspection

The frequency of inspection and maintenance varies by location. A routine inspection schedule needs to be established for each individual location based upon site specific variables. The type of land use (i.e. industrial, commercial, residential), anticipated pollutant load, percent imperviousness, climate, etc. all play a critical role in determining the actual frequency of inspection and maintenance practices.

At a minimum, StormTech recommends annual inspections. Initially, the Isolator Row Plus should be inspected every 6 months for the first year of operation. For subsequent years, the inspection should be adjusted based upon previous observation of sediment deposition.

The Isolator Row Plus incorporates a combination of standard manhole(s) and strategically located inspection ports (as needed). The inspection ports allow for easy access to the system from the surface, eliminating the need to perform a confined space entry for inspection purposes.

If upon visual inspection it is found that sediment has accumulated, a stadia rod should be inserted to determine the depth of sediment. When the average depth of sediment exceeds 3 inches throughout the length of the Isolator Row Plus, clean-out should be performed.

Maintenance

The Isolator Row Plus was designed to reduce the cost of periodic maintenance. By "isolating" sediments to just one row, costs are dramatically reduced by eliminating the need to clean out each row of the entire storage bed. If inspection indicates the potential need for maintenance, access is provided via a manhole(s) located on the end(s) of the row for cleanout. If entry into the manhole is required, please follow local and OSHA rules for a confined space entries.

Maintenance is accomplished with the JetVac process. The JetVac process utilizes a high pressure water nozzle to propel itself down the Isolator Row Plus while scouring and suspending sediments. As the nozzle is retrieved, the captured pollutants are flushed back into the manhole for vacuuming. Most sewer and pipe maintenance companies have vacuum/JetVac combination vehicles. Selection of an appropriate JetVac nozzle will improve maintenance efficiency. Fixed nozzles designed for culverts or large diameter pipe cleaning are preferable. Rear facing jets with an effective spread of at least 45" are best. StormTech recommends a maximum nozzle pressure of 2000 psi be utilized during cleaning. JetVac reels can vary in length. For ease of maintenance, ADS recommends Isolator Row Plus lengths up to 200' (61 m). **The JetVac process shall only be performed on StormTech Isolator Row Plus that have ADS Plus Fabric (as specified by StormTech) over their angular base stone.**

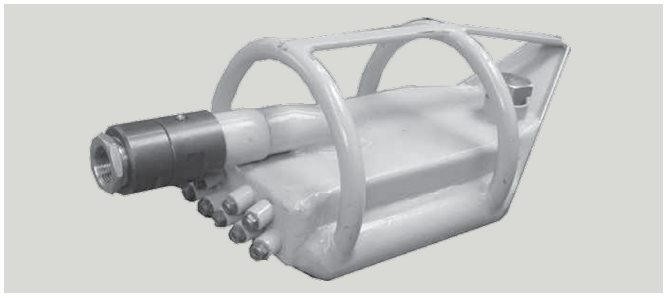

StormTech Isolator Row PLUS (*not to scale*)

Note: *Non-woven fabric is only required over the inlet pipe connection into the end cap for SC-160LP, DC-780, MC-3500 and MC-7200 chamber models and is not required over the entire Isolator Row PLUS.*

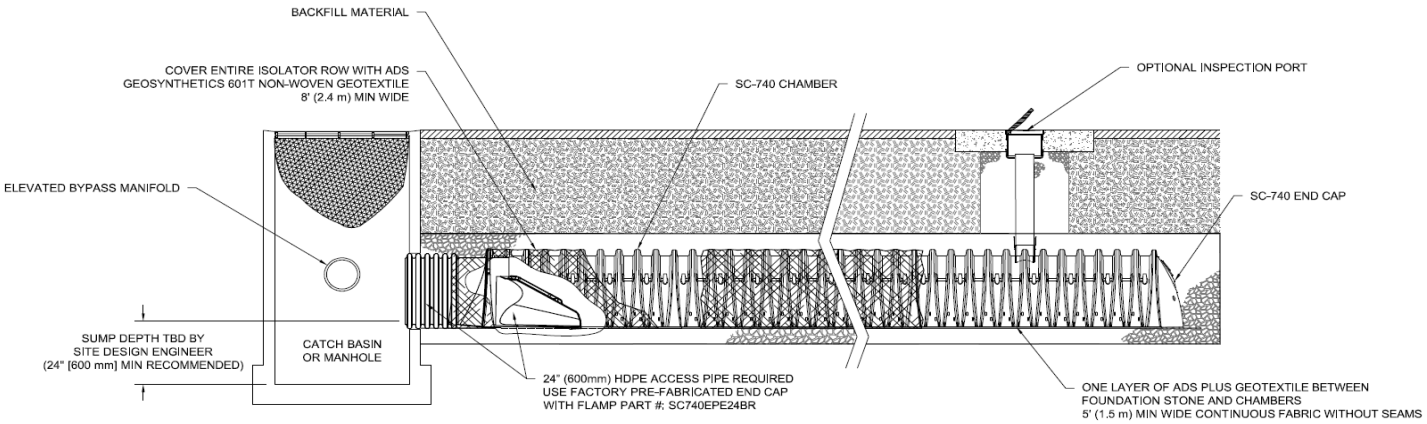

Isolator Row Plus Step By Step Maintenance Procedures

Step 1

Inspect Isolator Row Plus for sediment.

A) Inspection ports (if present)
- i. Remove lid from floor box frame
- ii. Remove cap from inspection riser
- iii. Using a flashlight and stadia rod,measure depth of sediment and record results on maintenance log.
- iv. If sediment is at or above 3 inch depth, proceed to Step 2. If not, proceed to Step 3.

B) All Isolator Row Plus
- i. Remove cover from manhole at upstream end of Isolator Row Plus
- ii. Using a flashlight, inspect down Isolator Row Plus through outlet pipe
  1. Mirrors on poles or cameras may be used to avoid a confined space entry
  2. Follow OSHA regulations for confined space entry if entering manhole
- iii. If sediment is at or above the lower row of sidewall holes (approximately 3 inches), proceed to Step 2.
  If not, proceed to Step 3.

Step 2

Clean out Isolator Row Plus using the JetVac process.

A) A fixed floor cleaning nozzle with rear facing nozzle spread of 45 inches or more is preferable
B) Apply multiple passes of JetVac until backflush water is clean
C) Vacuum manhole sump as required

Step 3

Replace all caps, lids and covers, record observations and actions.

Step 4

Inspect & clean catch basins and manholes upstream of the StormTech system.

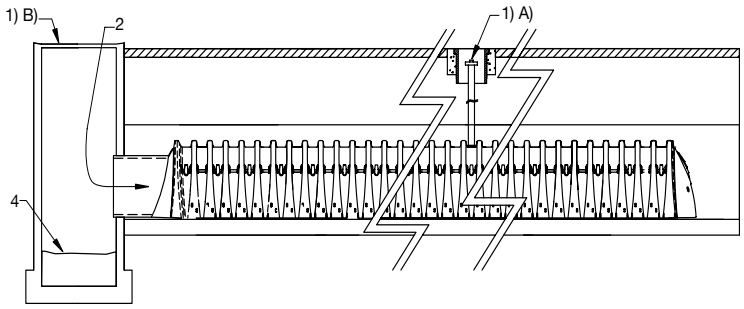

Sample Maintenance Log

Date	Stadia Rod Readings		Sedi-ment Depth (1)–(2)	Observations/Actions	Inspector
	Fixed point to chamber bottom (1)	Fixed point to top of sediment (2)			
3/15/11	6.3 ft	none		New installation. Fixed point is CI frame at grade	DJM
9/24/11		6.2	0.1 ft	Some grit felt	SM
6/20/13		5.8	0.5 ft	Mucky feel, debris visible in manhole and in Isolator Row PLUS, maintenance due	NV
7/7/13	6.3 ft		0	System jetted and vacuumed	DJM

adspipe.com

800-821-6710

ADS "Terms and Conditions of Sale" are available on the ADS website, www.ads-pipe.com
The ADS logo and the Green Stripe are registered trademarks of Advanced Drainage Systems, Inc.
StormTech® and the Isolator® Row Plus are registered trademarks of StormTech, Inc.
© 2022 Advanced Drainage Systems, Inc. #11081 2/22 CS

ADS StormTech® Installation Guide

SC-310/SC-740/DC-780

StormTech Installation Video

Required Materials and Equipment List

- Acceptable fill materials per Table 1
- ADS Plus and non-woven geotextile fabrics
- StormTech solid end caps and pre-cored end caps
- StormTech chambers
- StormTech manifolds and fittings

Important Notes:

A. This installation guide provides the minimum requirements for proper installation of chambers. Non-adherence to this guide may result in damage to chambers during installation. Replacement of damaged chambers during or after backfilling is costly and very time consuming. It is recommended that all installers are familiar with this guide, and that the contractor inspects the chambers for distortion, damage and joint integrity as work progresses.

B. Use of a dozer to push embedment stone between the rows of chambers may cause damage to chambers and is not an acceptable backfill method. Any chambers damaged by using the "dump and push" method are not covered under the StormTech standard warranty.

C. Care should be taken in the handling of chambers and end caps. Avoid dropping, prying or excessive force on chambers during removal from pallet and initial placement.

Requirements for System Installation

Excavate bed and prepare subgrade per engineer's plans.

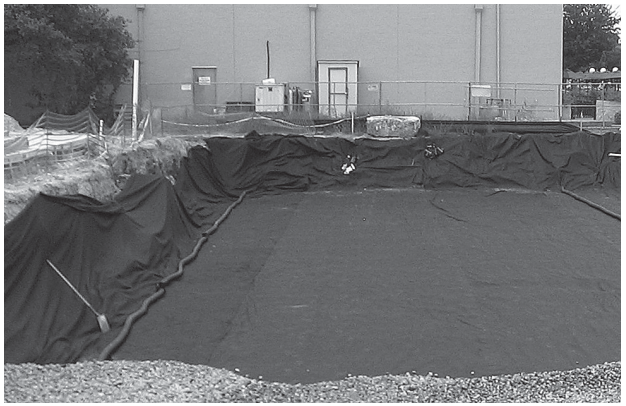

Place non-woven geotextile over prepared soils and up excavation walls. Install underdrains if required.

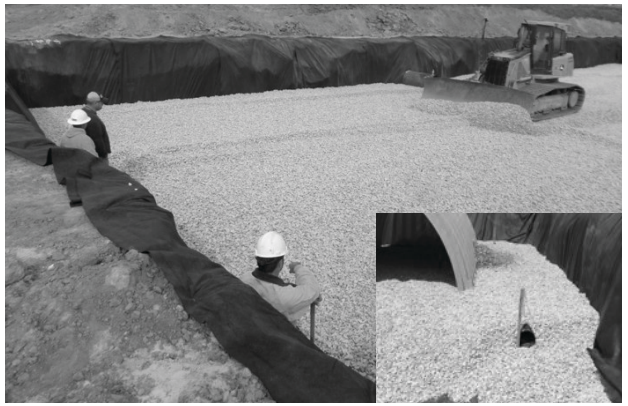

Place clean, crushed, angular stone foundation 6" (150 mm) min. Compact to achieve a flat surface.

Manifold, Scour Fabric and Chamber Assembly

Install manifolds and lay out ADS Plus fabric at inlet rows (min. 12.5 ft (3.8 m)) at each inlet end cap. Place a continuous piece along entire length of Isolator® Plus Row(s).

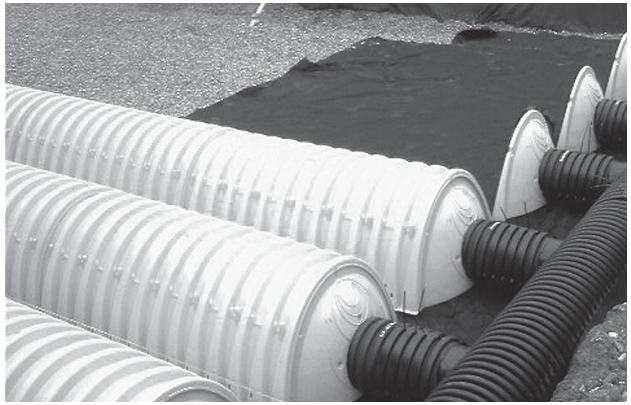

Align the first chamber and end cap of each row with inlet pipes. Contractor may choose to postpone stone placement around end chambers and leave ends of rows open for easy inspection of chambers during the backfill process.

Continue installing chambers by overlapping chamber end corrugations. Chamber joints are labeled “Lower Joint – Overlap Here” and “Build this direction – Upper Joint” Be sure that the chamber placement does not exceed the reach of the construction equipment used to place the stone. Maintain minimum 6” (150 mm) spacing between rows.

Attaching the End Caps

Lift the end of the chamber a few inches off the ground. With the curved face of the end cap facing outward, place the end cap into the chamber’s end corrugation.

Prefabricated End Caps

24” (600 mm) inlets are the maximum size that can fit into a SC-740/DC-780 end cap and must be prefabricated with a 24” (600 mm) pipe stub. SC-310 chambers with a 12” (300 mm) inlet pipe must use a prefabricated end cap with a 12” (300 mm) pipe stub. When used on an Isolator Row Plus, these end caps will contain a welded FLAMP (flared end ramp) that will lay on top of the ADS Plus fabric (shown above)

Isolator Row Plus

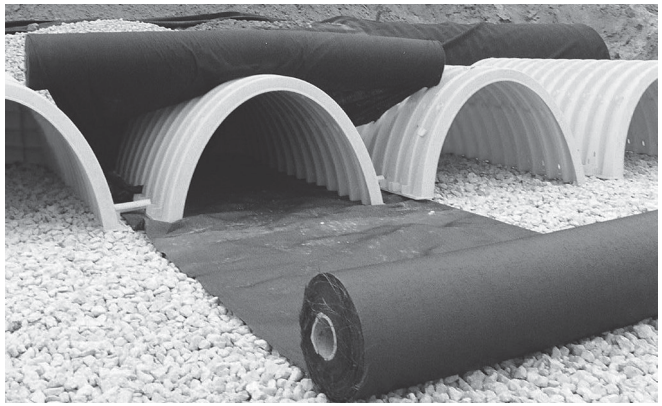

Place a continuous layer of ADS Plus fabric between the foundation stone and the Isolator Row Plus chambers, making sure the fabric lays flat and extends the entire width of the chamber feet. Drape a strip of ADS non-woven geotextile over the row of chambers (not required over DC-780). This is the same type of non-woven geotextile used as a separation layer around the angular stone of the StormTech system.

Initial Anchoring of Chambers – Embedment Stone

Initial embedment shall be spotted along the centerline of the chamber evenly anchoring the lower portion of the chamber. This is best accomplished with a stone conveyor or excavator reaching along the row.

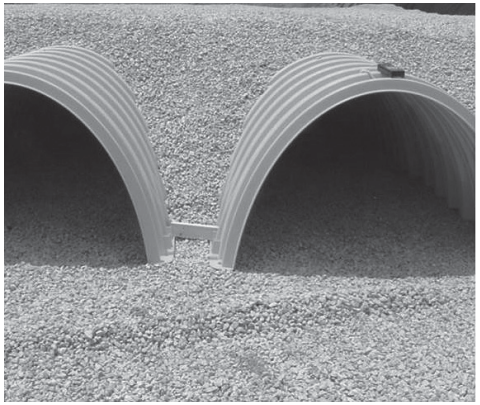

No equipment shall be operated on the bed at this stage of the installation. Excavators must be located off the bed. Dump trucks shall not dump stone directly on to the bed. Dozers or loaders are not allowed on the bed at this time.

Backfill of Chambers – Embedment Stone

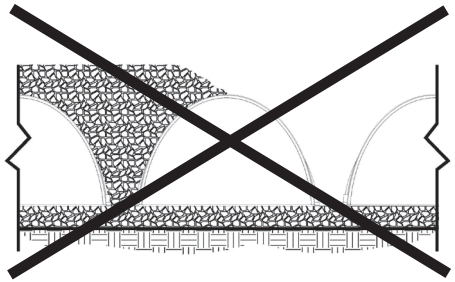

Uneven Backfill

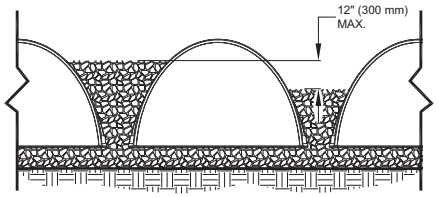

Even Backfill

Backfill chambers evenly. Stone column height should never differ by more than 12” (300 mm) between adjacent chamber rows or between chamber rows and perimeter.

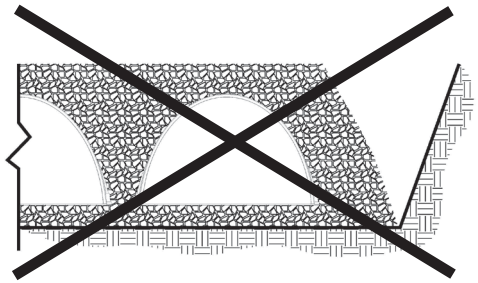

Perimeter Not Backfilled

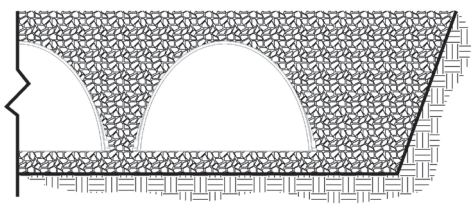

Perimeter Fully Backfilled

Perimeter stone must be brought up evenly with chamber rows. Perimeter must be fully backfilled, with stone extended horizontally to the excavation wall.

Backfill - Embedment Stone & Cover Stone

Continue evenly backfilling between rows and around perimeter until embedment stone reaches tops of chambers. Perimeter stone must extend horizontally to the excavation wall for both straight or sloped sidewalls. **Only after chambers have been backfilled to top of chamber and with a minimum 6” (150 mm) of cover stone on top of chambers can small dozers be used over the chambers for backfilling remaining cover stone.**

Small dozers and skid loaders may be used to finish grading stone backfill in accordance with ground pressure limits in Table 2. They must push material parallel to rows only. Never push perpendicular to rows. StormTech recommends that the contractor inspect chambers before placing final backfill. Any chambers damaged by construction shall be removed and replaced.

Final Backfill of Chambers – Fill Material

Install non-woven geotextile over stone. Geotextile must overlap 24” (600 mm) min. where edges meet. Compact each lift of backfill as specified in the site design engineer’s drawings. Roller travel parallel with rows.

Inserta Tee Detail

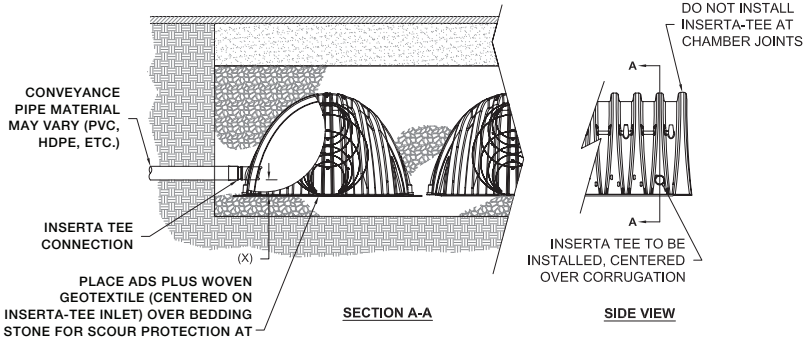

CHAMBER	MAX DIAMETER OF INSERTA TEE	HEIGHT FROM BASE OF CHAMBER (X)
SC-310	6” (150 mm)	4” (100 mm)
SC-740	10” (250 mm)	4” (100 mm)
DC-780	10” (250 mm)	4” (100 mm)
INSERTA TEE FITTINGS AVAILABLE FOR SDR 26, SDR 36, SCH 40 IPS GASKETED & SOLVENT WELD, N-12, HP STORM, C-900 OR DUCTILE IRON.		

NOTE:
PART NUMBERS WILL VARY BASED ON INLET PIPE MATERIALS. CONTACT STORMTECH FOR MORE INFORMATION.

StormTech Isolator Row Plus Detail

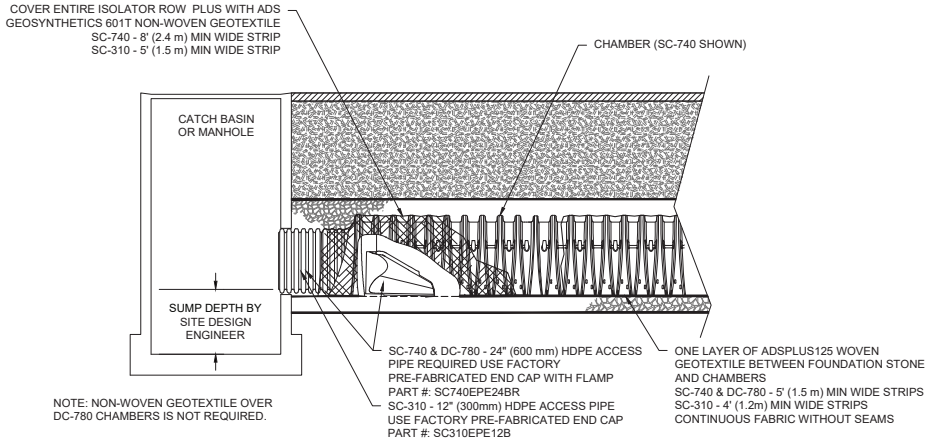

Table 1- Acceptable Fill Materials

Material Location	Description	AASHTO M43 Designation[1]	Compaction/Density Requirement
(D) **Final Fill:** Fill Material for layer 'D' starts from the top of the 'C' layer to the bottom of flexible pavement or unpaved finished grade above. Note that the pavement subbase may be part of the 'D' layer.	Any soil/rock materials, native soils or per engineer's plans. Check plans for pavement subgrade requirements.	N/A	Prepare per site design engineer's plans. Paved installations may have stringent material and preparation requirements.
(C) **Initial Fill:** Fill Material for layer 'C' starts from the top of the embedment stone ('B' layer) to 18" (450 mm) above the top of the chamber. Note that pavement subbase may be part of the 'C' layer.	Granular well-graded soil/aggregate mixtures, <35% fines or processed aggregate. Most pavement subbase materials can be used in lieu of this layer.	AASHTO M45 A-1, A-2-4, A-3 or AASHTO M43[1] 3, 357, 4, 467, 5, 56, 57, 6, 67, 68, 7, 78, 8, 89, 9, 10	Begin compaction after min. 12" (300 mm) of material over the chambers is reached. Compact additional layers in 6" (150 mm) max. lifts to a min. 95% Proctor density for well-graded material and 95% relative density for processed aggregate materials. Roller gross vehicle weight not to exceed 12,000 lbs (53 kN). Dynamic force not to exceed 20,000 lbs (89 kN)
(B) **Embedment Stone:** Embedment Stone surrounding chambers from the foundation stone to the 'C' layer above.	Clean, crushed, angular stone	AASHTO M43[1] 3, 357, 4, 467, 5, 56, 57	No compaction required.
(A) **Foundation Stone:** Foundation Stone below the chambers from the subgrade up to the foot (bottom) of the chamber.	Clean, crushed, angular stone,	AASHTO M43[1] 3, 357, 4, 467, 5, 56, 57	Place and compact in 6" (150 mm) lifts using two full coverages with a vibratory compactor.[2,3]

Please Note:

1. The listed AASHTO designations are for gradations only. The stone must also be clean, crushed, angular. For example, a specification for #4 stone would state: "clean, crushed, angular no. 4 (AASHTO M43) stone".
2. StormTech compaction requirements are met for 'A' location materials when placed and compacted in 6" (150 mm) (max) lifts using two full coverages with a vibratory compactor.
3. Where infiltration surfaces may be comprised by compaction, for standard installations and standard design load conditions, a flat surface may be achieved by raking or dragging without compaction equipment. For special load designs, contact StormTech for compaction requirements.

Figure 1- Inspection Port Detail

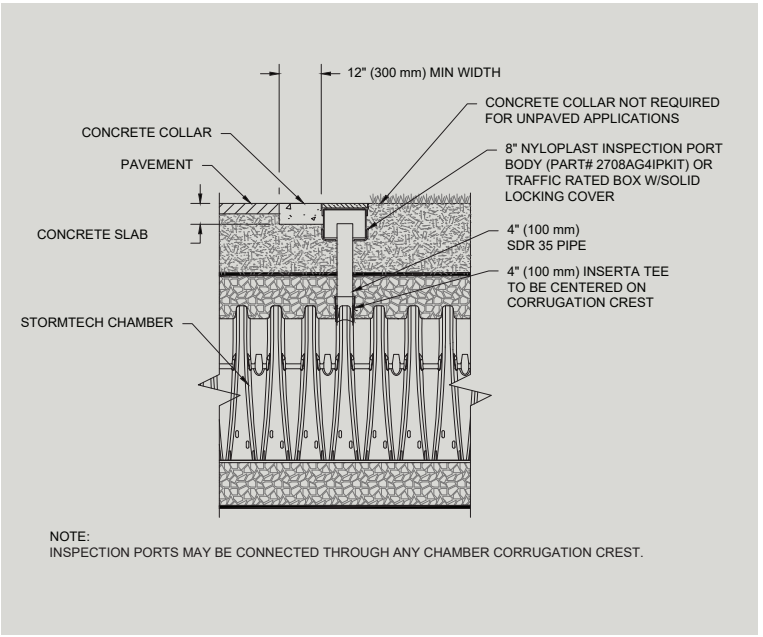

Figure 2 - Fill Material Locations

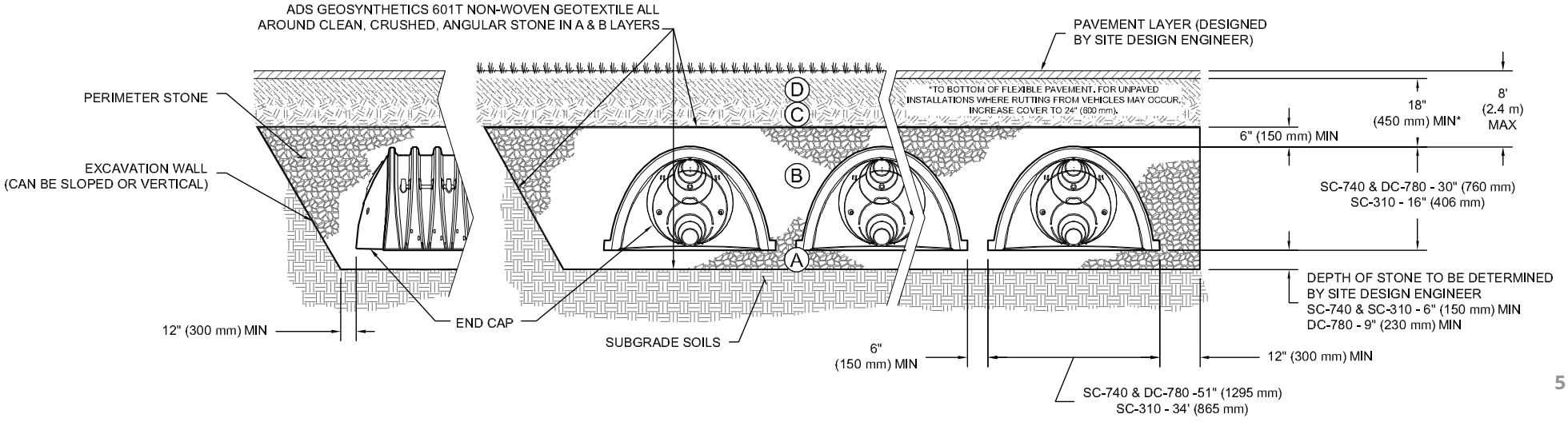

Notes:

1. 36” (900 mm) of stabilized cover materials over the chambers is recommended during the construction phase if general construction activities, such as full dump truck travel and dumping, are to occur over the bed.
2. During paving operations, dump truck axle loads on 18” (450 mm) of cover may be necessary. Precautions should be taken to avoid rutting of the road base layer, to ensure that compaction requirements have been met, and that a minimum of 18” (450 mm) of cover exists over the chambers. Contact StormTech for additional guidance on allowable axle loads during paving.
3. Ground pressure for track dozers is the vehicle operating weight divided by total ground contact area for both tracks. Excavators will exert higher ground pressures based on loaded bucket weight and boom extension.
4. Mini-excavators (< 8,000lbs/3,628 kg) can be used with at least 12” (300 mm) of stone over the chambers and are limited by the maximum ground pressures in Table 2 based on a full bucket at maximum boom extension.
5. Storage of materials such as construction materials, equipment, spoils, etc. should not be located over the StormTech system. The use of equipment over the StormTech system not covered in Table 2 (ex. soil mixing equipment, cranes, etc) is limited. Please contact StormTech for more information.
6. Allowable track loads based on vehicle travel only. Excavators shall not operate on chamber beds until the total backfill reaches 3 feet (900 mm) over the entire bed.

Table 2 - Maximum Allowable Construction Vehicle Loads[6]

Material Location	Fill Depth over Chambers in. (mm)	Maximum Allowable Wheel Loads		Maximum Allowable Track Loads[6]		Maximum Allowable Roller Loads
		Max Axle Load for Trucks lbs (kN)	Max Wheel Load for Loaders lbs (kN)	Track Width in. (mm)	Max Ground Pressure psf (kPa)	Max Drum Weight or Dynamic Force lbs (kN)
Ⓓ Final Fill Material	36” (900) Compacted	32,000 (142)	16,000 (71)	12” (305) 18” (457) 24” (610) 30” (762) 36” (914)	3880 (186) 2640 (126) 2040 (97) 1690 (81) 1470 (70)	38,000 (169)
Ⓒ Initial Fill Material	24” (600) Compacted	32,000 (142)	16,000 (71)	12” (305) 18” (457) 24” (610) 30” (762) 36” (914)	2690 (128) 1880 (90) 1490 (71) 1280 (61) 1150 (55)	20,000 (89)
	24” (600) Loose/ Dumped	32,000 (142)	16,000 (71)	12” (305) 18” (457) 24” (610) 30” (762) 36” (914)	2390 (114) 1700 (81) 1370 (65) 1190 (57) 1080 (51)	20,000 (89) Roller gross vehicle weight not toexceed 12,000 lbs. (53 kN)
	18” (450)	32,000 (142)	16,000 (71)	12” (305) 18” (457) 24” (610) 30” (762) 36” (914)	2110 (101) 1510 (72) 1250 (59) 1100 (52) 1020 (48)	20,000 (89) Roller gross vehicle weight not to exceed 12,000 lbs. (53 kN)
Ⓑ Embedment Stone	12” (300)	16,000 (71)	NOT ALLOWED	12” (305) 18” (457) 24” (610) 30” (762) 36” (914)	1540 (74) 1190 (57) 1010 (48) 910 (43) 840 (40)	20,000 (89) Roller gross vehicle weight not to exceed 12,000 lbs. (53 kN)
	6” (150)	8,000 (35)	NOT ALLOWED	12” (305) 18” (457) 24” (610) 30” (762) 36” (914)	1070 (51) 900 (43) 800 (38) 760 (36) 720 (34)	NOT ALLOWED

Table 3 - Placement Methods and Descriptions

Material Location	Placement Methods/ Restrictions	Wheel Load Restrictions	Track Load Restrictions	Roller Load Restrictions
		See Table 2 for Maximum Construction Loads		
Ⓓ Final Fill Material	A variety of placement methods may be used. All construction loads must not exceed the maximum limits in Table 2.	36” (900 mm) minimum cover required for dump trucks to dump over chambers.	Dozers to push parallel to rows until 36” (900mm) compaced cover is reached.[4]	Roller travel parallel to rows only until 36” (900 mm) compacted cover is reached.
Ⓒ Initial Fill Material	Excavator positioned off bed recommended. Small excavator allowed over chambers. Small dozer allowed.	Asphalt can be dumped into paver when compacted pavement subbase reaches 18” (450 mm) above top of chambers.	Small LGP track dozers & skid loaders allowed to grade cover stone with at least 6” (150 mm) stone under tracks at all times. Equipment must push parallel to rows at all times.	Use dynamic force of roller only after compacted fill depth reaches 12” (300 mm) over chambers. Roller travel parallel to chamber rows only.
Ⓑ Embedment Stone	No equipment allowed on bare chambers. Use excavator or stone conveyor positioned off bed or on foundation stone to evenly fill around all chambers to at least the top of chambers.	No wheel loads allowed. Material must be placed outside the limits of the chamber bed.	No tracked equipment is allowed on chambers until a min. 6” (150 mm) cover stone is in place.	No rollers allowed.
Ⓐ Foundation Stone	No StormTech restrictions. Contractor responsible for any conditions or requirements by others relative to subgrade bearing capacity, dewatering or protection of subgrade.			

ADS “Terms and Conditions of Sale” are available on the ADS website, www.ads-pipe.com. Advanced Drainage Systems, the ADS logo, and the green stripe are registered trademarks of Advanced Drainage Systems, Inc. StormTech® and the Isolator® Row Plus are registered trademarks of StormTech, Inc
©2021 Advanced Drainage Systems, Inc. #11010 7/21 CS

StormTech® Standard Limited Warranty

STANDARD LIMITED WARRANTY OF STORMTECH LLC ("STORMTECH"): PRODUCTS

(A) This Limited Warranty applies solely to the StormTech chambers and end plates manufactured by StormTech and sold to the original purchaser (the "Purchaser"). The chambers and end plates are collectively referred to as the "Products."

(B) The structural integrity of the Products, when installed strictly in accordance with StormTech's written installation instructions at the time of installation, are warranted to the Purchaser against defective materials and workmanship for one (1) year from the date of purchase. Should a defect appear in the Limited Warranty period, the Purchaser shall provide StormTech with written notice of the alleged defect at StormTech's corporate headquarters within ten (10) days of the discovery of the defect. The notice shall describe the alleged defect in reasonable detail. StormTech agrees to supply replacements for those Products determined by StormTech to be defective and covered by this Limited Warranty. The supply of replacement products is the sole remedy of the Purchaser for breaches of this Limited Warranty. StormTech's liability specifically excludes the cost of removal and/or installation of the Products.

(C) THIS LIMITED WARRANTY IS EXCLUSIVE. THERE ARE NO OTHER WARRANTIES WITH RESPECT TO THE PRODUCTS, INCLUDING NO IMPLIED WARRANTIES OF MERCHANTABILITY OR OF FITNESS FOR A PARTICULAR PURPOSE.

(D) This Limited Warranty only applies to the Products when the Products are installed in a single layer. UNDER NO CIRCUMSTANCES, SHALL THE PRODUCTS BE INSTALLED IN A MULTI-LAYER CONFIGURATION.

(E) No representative of StormTech has the authority to change this Limited Warranty in any manner or to extend this Limited Warranty. This Limited Warranty does not apply to any person other than to the Purchaser.

(F) Under no circumstances shall StormTech be liable to the Purchaser or to any third party for product liability claims; claims arising from the design, shipment, or installation of the Products, or the cost of other goods or services related to the purchase and installation of the Products. For this Limited Warranty to apply, the Products must be installed in accordance with all site conditions required by state and local codes; all other applicable laws; and StormTech's written installation instructions.

(G) THE LIMITED WARRANTY DOES NOT EXTEND TO INCIDENTAL, CONSEQUENTIAL, SPECIAL OR INDIRECT DAMAGES. STORMTECH SHALL NOT BE LIABLE FOR PENALTIES OR LIQUIDATED DAMAGES, INCLUDING LOSS OF PRODUCTION AND PROFITS; LABOR AND MATERIALS; OVERHEAD COSTS; OR OTHER LOSS OR EXPENSE INCURRED BY THE PURCHASER OR ANY THIRD PARTY. SPECIFICALLY EXCLUDED FROM LIMITED WARRANTY COVERAGE ARE DAMAGE TO THE PRODUCTS ARISING FROM ORDINARY WEAR AND TEAR; ALTERATION, ACCIDENT, MISUSE, ABUSE OR NEGLECT; THE PRODUCTS BEING SUBJECTED TO VEHICLE TRAFFIC OR OTHER CONDITIONS WHICH ARE NOT PERMITTED BY STORMTECH'S WRITTEN SPECIFICATIONS OR INSTALLATION INSTRUCTIONS; FAILURE TO MAINTAIN THE MINIMUM GROUND COVERS SET FORTH IN THE INSTALLATION INSTRUCTIONS; THE PLACEMENT OF IMPROPER MATERIALS INTO THE PRODUCTS; FAILURE OF THE PRODUCTS DUE TO IMPROPER SITING OR IMPROPER SIZING; OR ANY OTHER EVENT NOT CAUSED BY STORMTECH. A PRODUCT ALSO IS EXCLUDED FROM LIMITED WARRANTY COVERAGE IF SUCH PRODUCT IS USED IN A PROJECT OR SYSTEM IN WHICH ANY GEOTEXTILE PRODUCTS OTHER THAN THOSE PROVIDED BY ADVANCED DRAINAGE SYSTEMS ARE USED. THIS LIMITED WARRANTY REPRESENTS STORMTECH'S SOLE LIABILITY TO THE PURCHASER FOR CLAIMS RELATED TO THE PRODUCTS, WHETHER THE CLAIM IS BASED UPON CONTRACT, TORT, OR OTHER LEGAL THEORY.

ADS StormTech™

adspipe.com
800-821-6710

ADS "Terms and Conditions of Sale" are available on the ADS website, www.ads-pipe.com
The ADS logo and the Green Stripe are registered trademarks of Advanced Drainage Systems, Inc.
StormTech® is a registered trademark of StormTech, Inc.
© 2023 Advanced Drainage Systems, Inc. 3/23 CS

ADS 0601T/O NONWOVEN GEOTEXTILE SPECIFICATION

Scope

This specification describes ADS 0601T/O nonwoven geotextile.

Filter Fabric Requirements

ADS 0601T/O is an orange nonwoven geotextile composed of polypropylene fibers, which are formed into a stable network such that the fibers retain their relative position. ADS 0601T/O is inert to biological degradation and resists naturally encountered chemicals, alkali and acids. ADS 0601T/O conforms to the physical property values listed below:

Filter Fabric Properties

Property	Test Method	Unit	Typical Value[1] MD	Typical Value[1] CD
Grab Tensile Strength	ASTM D4632	lbs (N)	175 (779)	175 (779)
Grab Tensile Elongation	ASTM D4632	%	75	75
Trapezoid Tear Strength	ASTM D4533	lbs (N)	85 (378)	85 (378)
CBR Puncture Strength	ASTM D6241	lbs (N)	480 (2136)	480 (2136)
Permittivity	ASTM D4491	sec^{-1}	1.5	1.5
Flow Rate	ASTM D4491	gal/min/ft^2 (l/min/m^2)	105 (4278)	105 (4278)
UV Resistance (at 500 hours)[1]	ASTM D4355	% strength retained	80	80

Physical Properties

Property	Test Method	Unit	Typical Value[2]
Weight	ASTM D5161	oz/yd^2 (g/m^2)	6.5 (220)
Thickness	ASTM D5199	mils (mm)	65 (1.7)
Roll Dimensions (W x L)	-	ft (m)	15 x 300 (4.5 x 91)
Roll Area	-	yd^2 (m^2)	500 (418)
Estimated Roll Weight	-	lb (kg)	220 (100)

1 Modified, Minimum Test Value
2 ASTM D4439 Standard Terminology for Geosynthetics: typical value, n-*for geosynthetics*, the mean value calculated from documented manufacturing quality control test results for a defined population obtained from one test method associated with on specific property.

ADS "Terms and Conditions of Sale" can be found on the ADS website, adspipe.com.
The ADS logo is a registered trademark of Advanced Drainage Systems, Inc. #0601T/O 10/22 MH

Separation

ADS 315W WOVEN GEOTEXTILE SPECIFICATION

Scope

This specification describes ADS 315W woven geotextile.

Filter Fabric Requirements

ADS 315W is manufactured using high-tenacity polypropylene yarns that are woven to form a dimensionally stable network, which allows the yarns to maintain their relative position. ADS 315W resists ultraviolet deterioration, rotting and biological degradation and is inert to commonly encountered soil chemicals. ADS 315W conforms to the physical property values listed below:

Filter Fabric Properties

Property	Test Method	Unit	M.A.R.V. (Minimum Average Roll Value)[2]
Tensile Strength (Grab)	ASTM D4632	lbs (N)	315 (1400)
Elongation	ASTM D4632	%	15
CBR Puncture	ASTM D6241	lbs (N)	900 (4005)
Puncture	ASTM D4833	lbs (N)	150 (667)
Mullen Burst	ASTM D3786	psi (kPa)	600 (4134)
Trapezoidal Tear	ASTM D4533	lbs (N)	120 (533)
UV Resistance (at 500 hours)	ASTM D4355	%	70
Apparent Opening Size (AOS)*	ASTM D4751	U.S. Sieve (mm)	40 (.425)
Permittivity	ASTM D4491	sec^{-1}	.05
Water Flow Rate	ASTM D4491	gpm/ft^2 ($l/min/m^2$)	4 (163)

* Maximum average roll value.

Packaging

Roll Dimensions (W x L) - ft. (m)	12.5 x 360/ 15 x 300 / 17.5 x 258 (3.81 x 109.8/ 4.57 x 91.5 / 5.33 x 78.6)

ADS "Terms and Conditions of Sale" can be found on the ADS website, adspipe.com.
The ADS logo is a registered trademark of Advanced Drainage Systems, Inc. #315W 10/22 MH